Installation Instructions

Depending on the relationship between the gland bolt circle diameter and the shaft diameter, either the inside mounted or the outside mounted design is used. Both configurations use the same basic installation procedure.

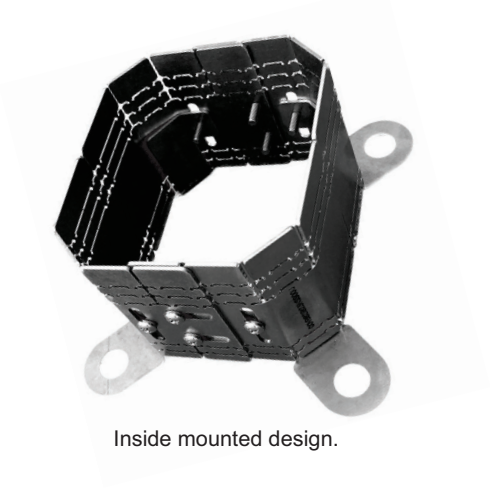

Inside mounted design.

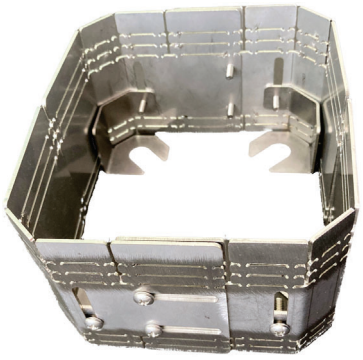

Outside mounted design.

OUTSIDE MOUNTED DESIGN EXPLODED VIEW

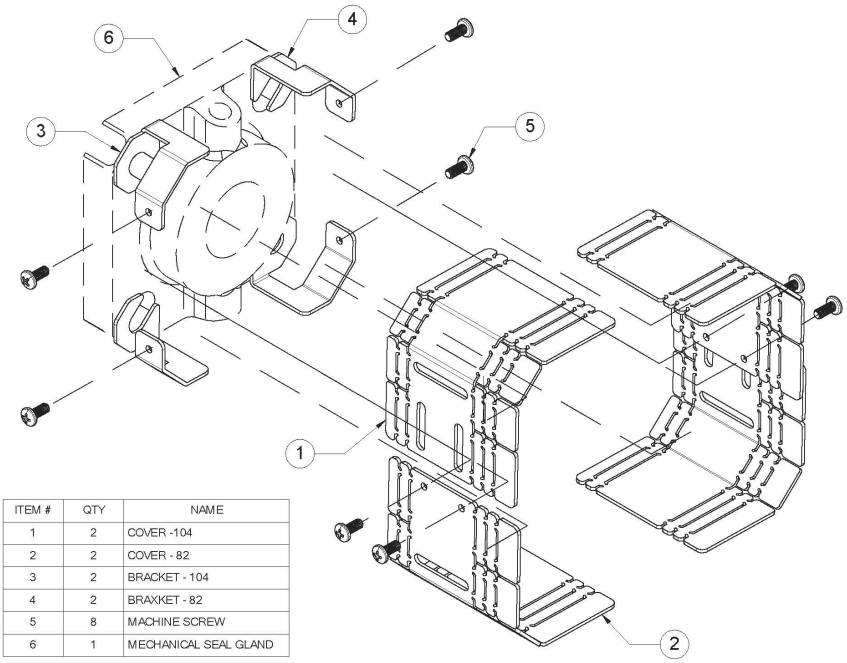

ITEM #	QTY	NAME
1	2	COVER -104
2	2	COVER - 82
3	2	BRACKET - 104
4	2	BRAXKET - 82
5	8	MACHINE SCREW
6	1	MECHANICAL SEAL GLAND

Installation Instructions

INSIDE MOUNTED DESIGN EXPLODED VIEW

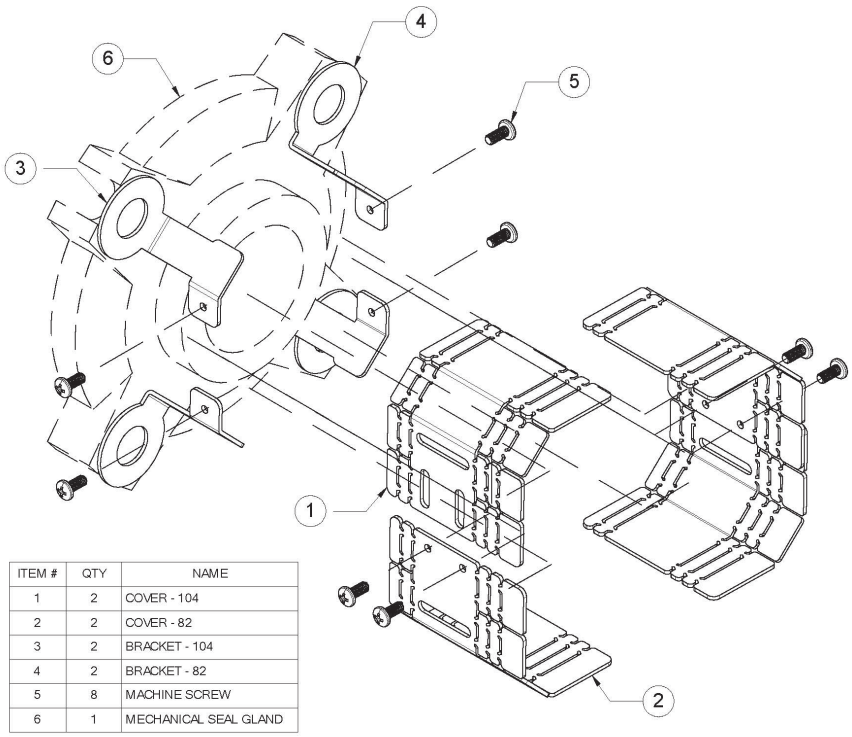

ITEM #	QTY	NAME
1	2	COVER - 104
2	2	COVER - 82
3	2	BRACKET - 104
4	2	BRACKET - 82
5	8	MACHINE SCREW
6	1	MECHANICAL SEAL GLAND

Step 1

Remove all contents of the package and verify that all the items listed above are present.
The mechanical seal gland is not included in the GlandGuard assembly.

Step 2

Ensure that the pump is not operating and power to the motor is locked out. Close suction and discharge valves to isolate the pump from the process and relieve any fluid or gas pressure present in the pump casing.

Installation Instructions

Step 3

Remove any existing guard from the area of the mechanical seal.

Step 4

Remove any single gland bolt or nut and install the appropriate bracket per the assembly drawing. Hint - the p/n engraved on the bracket contains either an “82" or a “104". This means that looking at the gland from the bearing housing side, the “82" brackets can be installed in either the 8:00 o’clock or 2:00 o’clock positions and the “104" brackets can be installed in either the 10:00 o’clock or 4:00 o’clock positions.

Once the first bracket is in place and before tightening the bolt or nut, rotate the bracket such that the surface with the tapped hole is as vertical as possible. Then snug up the nut or bolt as you usually would when installing the seal gland to the pump. Repeat this procedure for each gland nut or bolt individually while leaving the remaining three tight.

Step 5

Measure the distance needed to cover the length of all exposed rotating parts. This is the fit length for the GlandGuard covers and corresponds to the red line shown below.

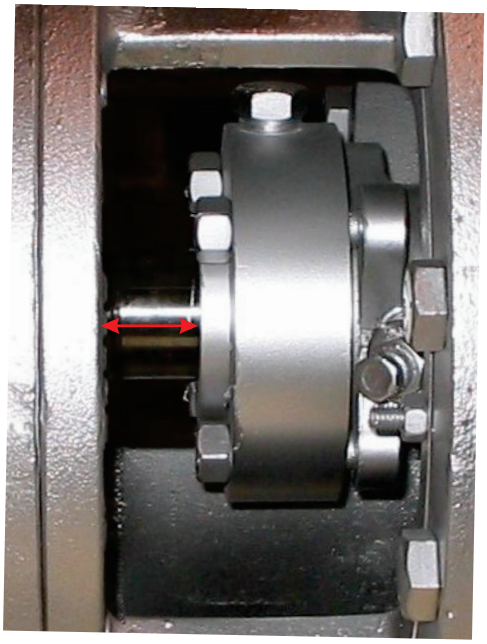

Installation Instructions

Step 6

Once this dimension is determined, break off as many tabs as necessary along one or both edges of each cover piece provided to get close to this required dimension. Remove equal amounts of tabs on each cover and always on the same side of each cover. Your final dimension should be as close as possible but not fall short of the measured fit length.

The side of each cover with more tabs is the side that should be mounted toward the pump bearing housing. We recommend removing these rows of tabs as necessary on each cover to achieve the desired fit length. If there is a need to remove additional tabs, do so at the other end as required.

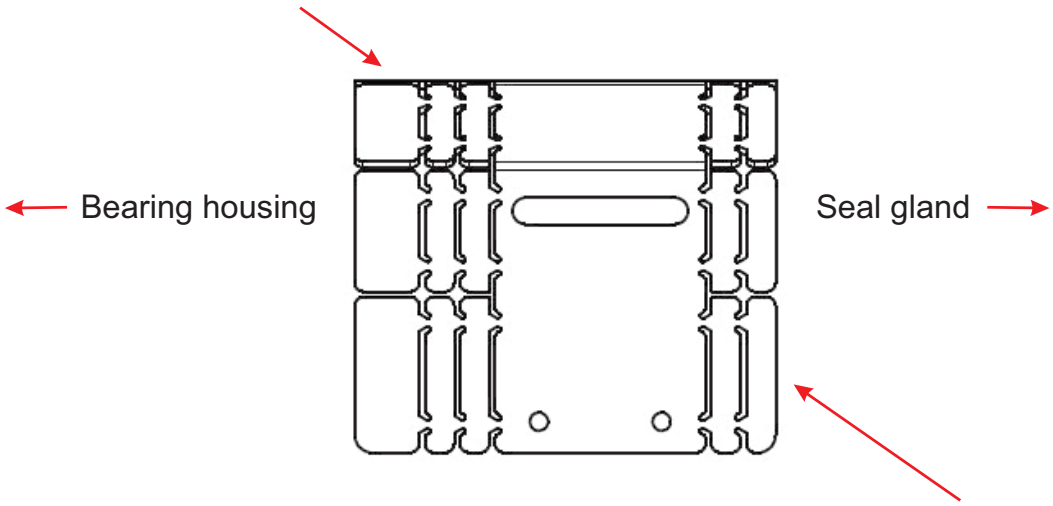

Once the fit length is established, additional tabs from this side (individual or multiple) can be removed as needed to accommodate any areas of undesirable contact with the gland such as casting bulges or flush ports.

Installation Instructions

Step 7

Preassemble the cover components as below into two halves as shown. Use 4 of the screws provided to loosely affix the parts together.

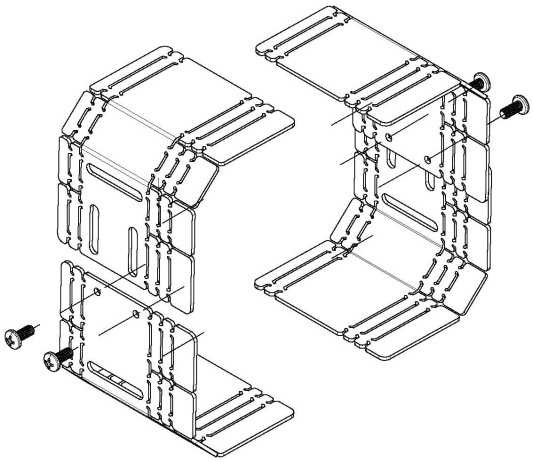

Step 8

Working with one side at a time, place the cover over the brackets, install one screw through the top slot and loosely secure it to the top bracket. Manipulate the bottom half of the cover such that the bottom slot lines up with the in the lower bracket and secure it loosely with a second screw as shown below. Manipulate the assembly as required to “square” it up and center it across the space you are guarding. Then tighten each of the screws. Repeat this same procedure on the other side of the pump.

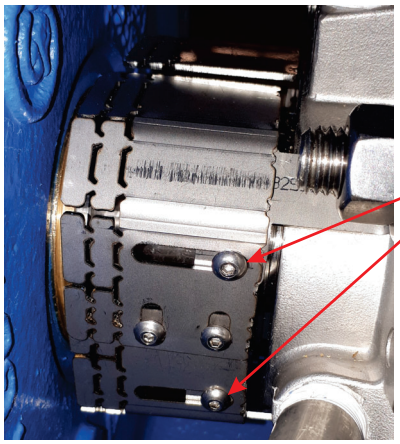

Screws securing cover to gland brackets.